PEGASI

ASSEMBLY INSTRUCTION

Item	Description	Qty	item	Description	Qty
1	Net	1	5	plastic expansion bolt M8X90	4
2	Rim	1	6	Bolt M8X35	4
3	backboard	1	7	Self tapping bolt	4
4	Hook	2			

PARTS PICTURES

INSTALLATION(choose one of below method for installation)

Method 1:Use Cross screwdriver to fix the two hooks(4) on the back of the backboard(3) as Shown.

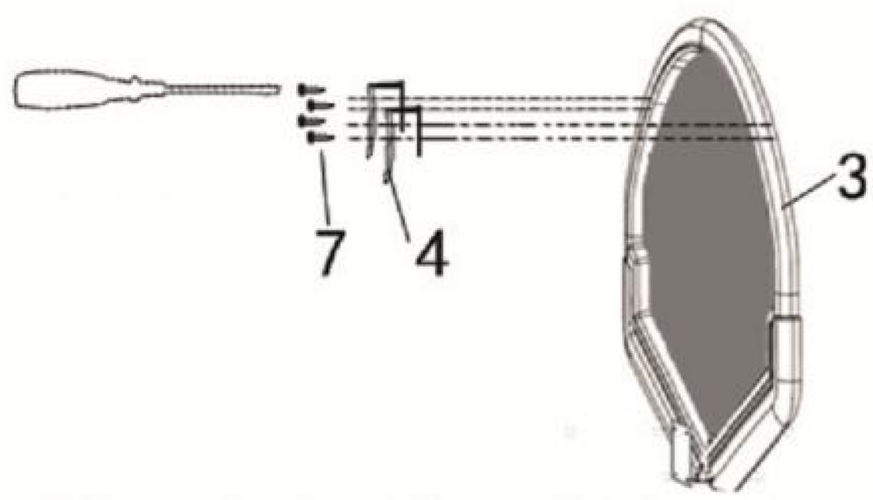

Install rim(2) on the backboard(3) by 4pcs bolts M8X35(6) as shown.

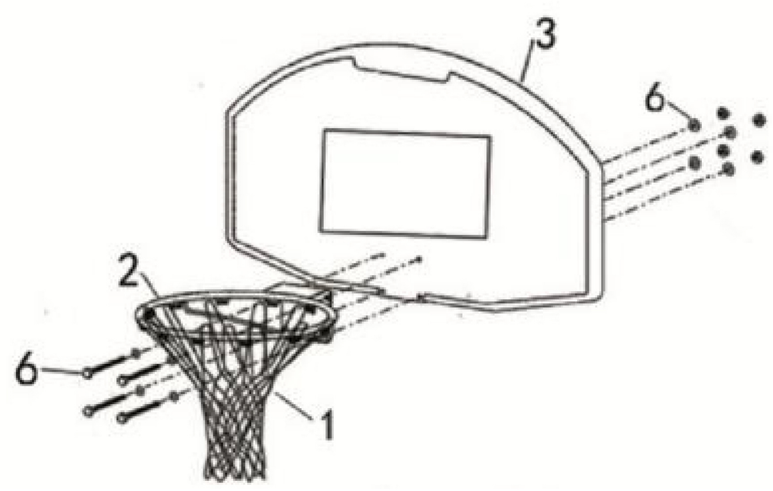

You can assemble this system on the door by this method.

Method 2:Install the backboard（3）and rim(2) on the wall by 4pcs plastic expansion bolts M8X90(5) as Shown.

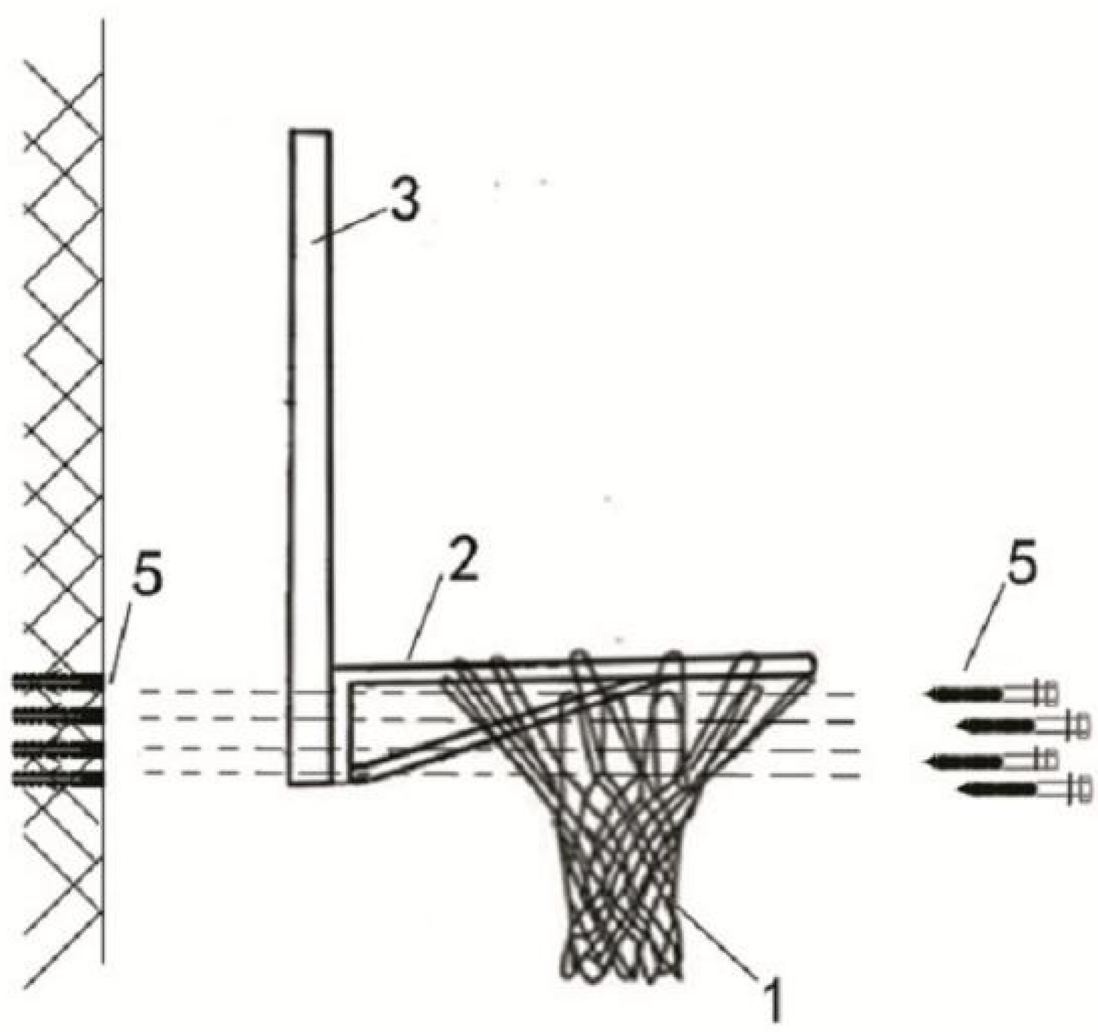
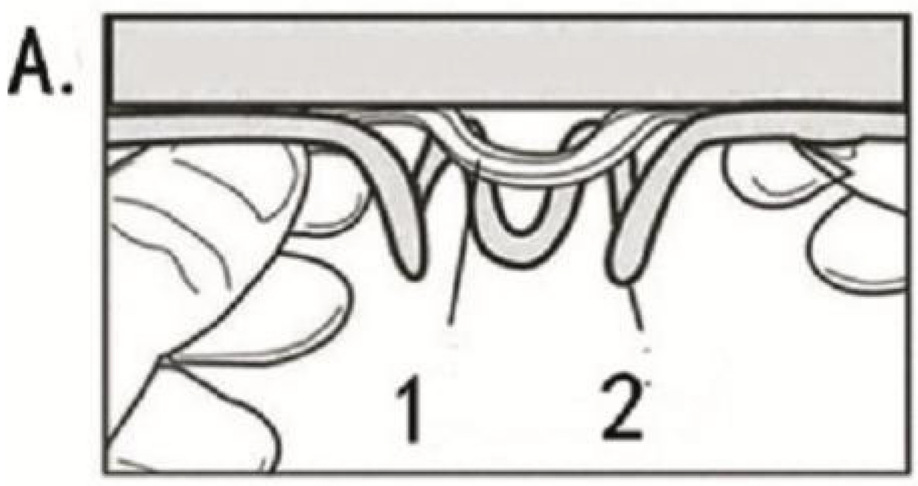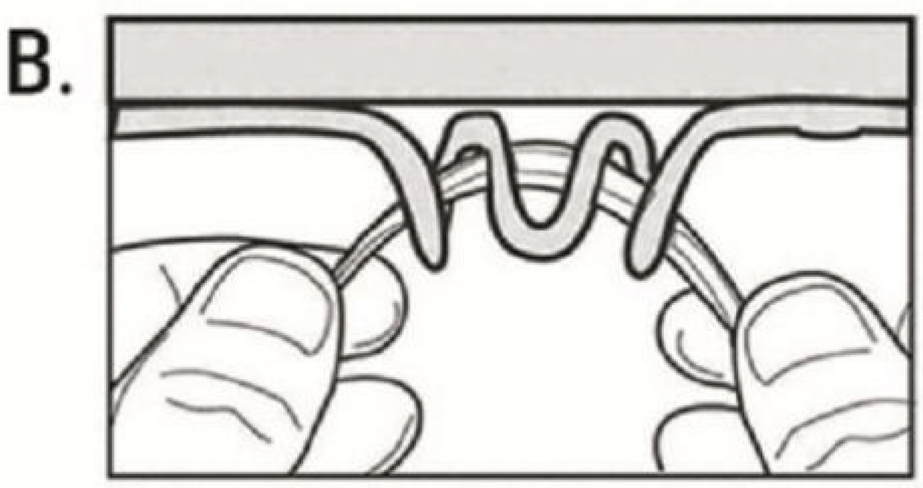
Install net(1) on rim(2) as Shown.