PEGASI

PARTS LIST

Item	Qty.	Description	Item	Qty.	Description
1	4	Bolt M10x70,with nut and washer	5	1	Net
2	2	Bolt M8x45, with nut and washer	6	1	Backboard
3	4	Plug bolt	7	1	Backboard Bracket
4	1	Ring	8	2	Bolt M8x120,with spring

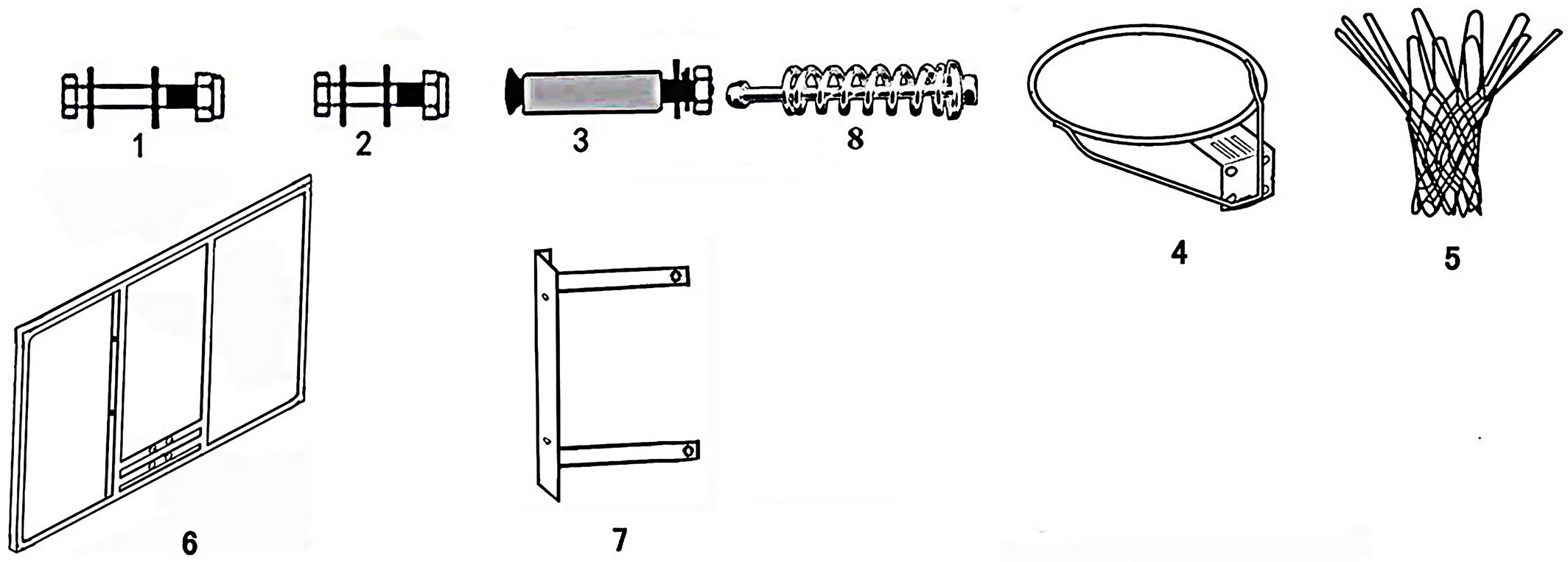

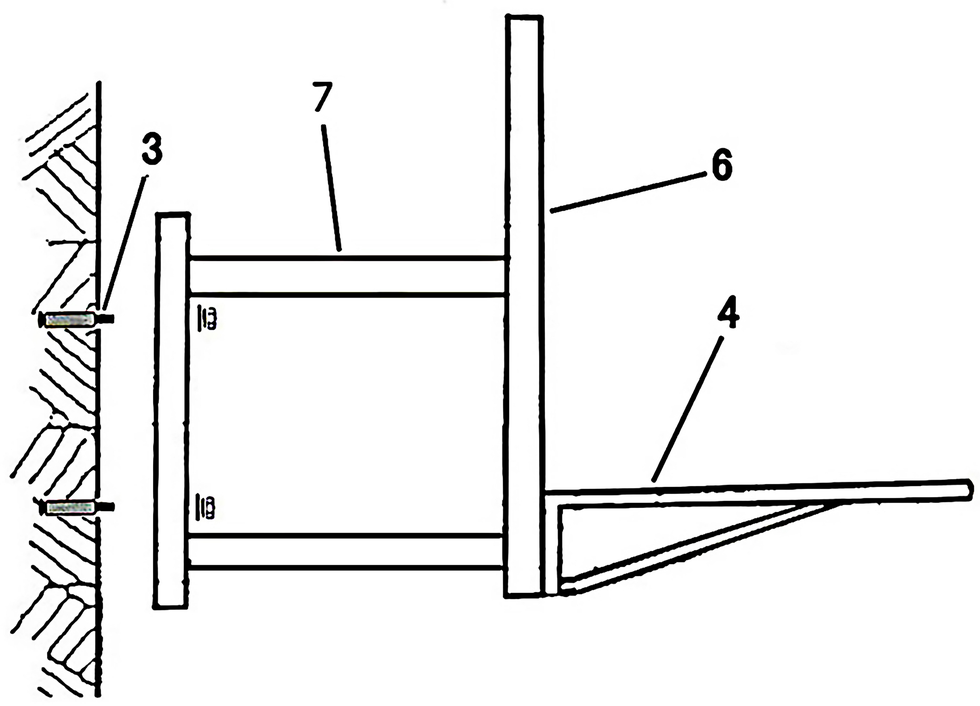

1. Fix the 2pcs backboard bracket (7) by plug bolt (3) on wall as shown.

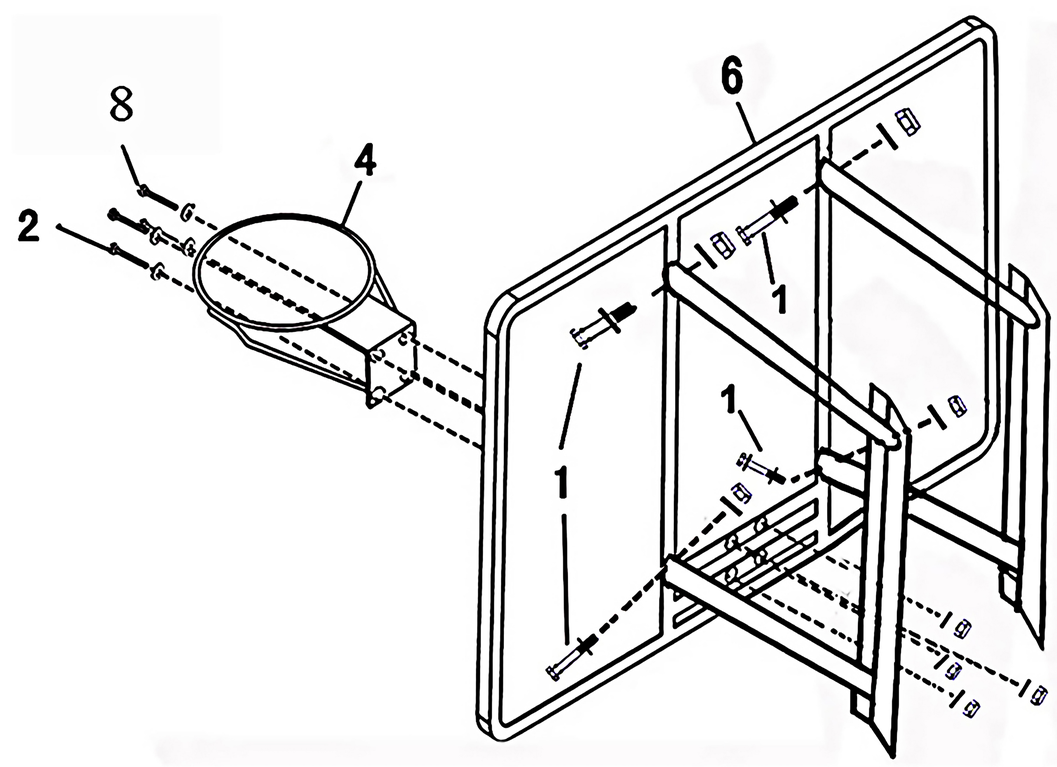

2. Install ring (4) on backboard(6) by 4pcs bolt(2), also install backboard bracket(7) on backboard (6) by bolt(1) as shown.
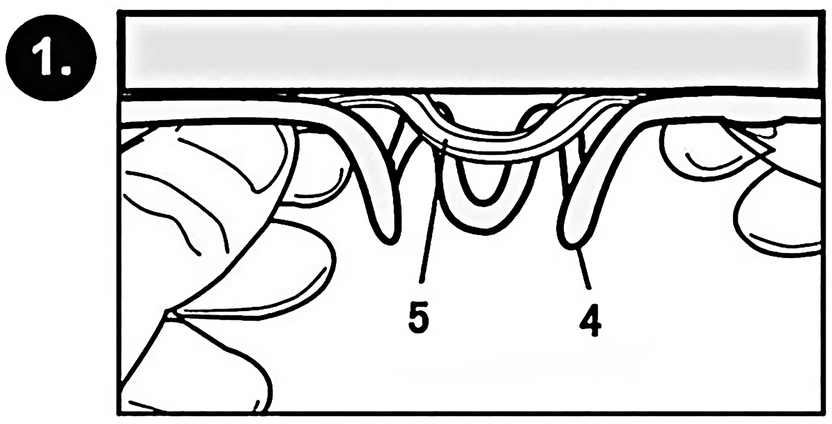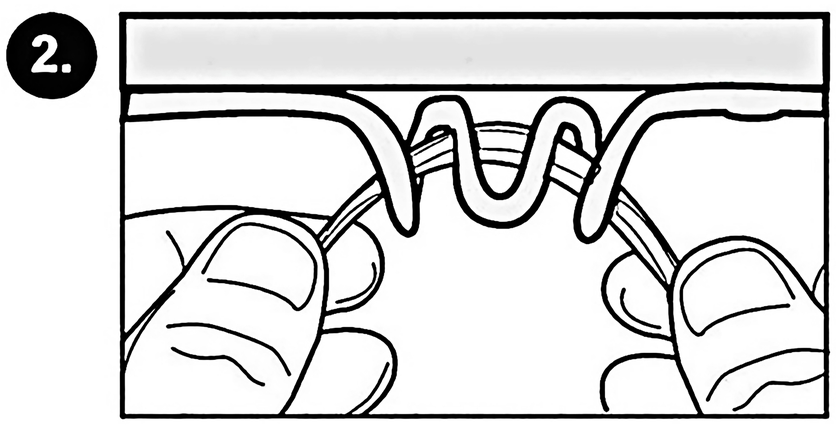
3. Install net(5)