PEGASI
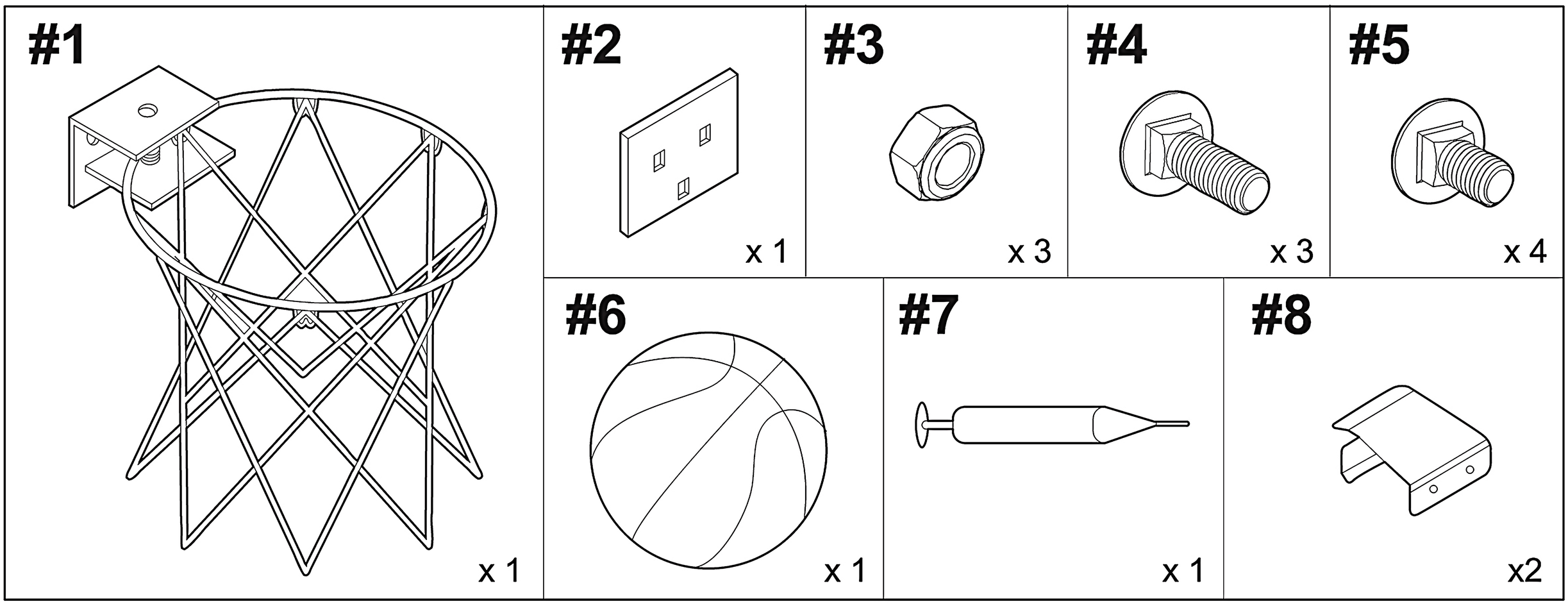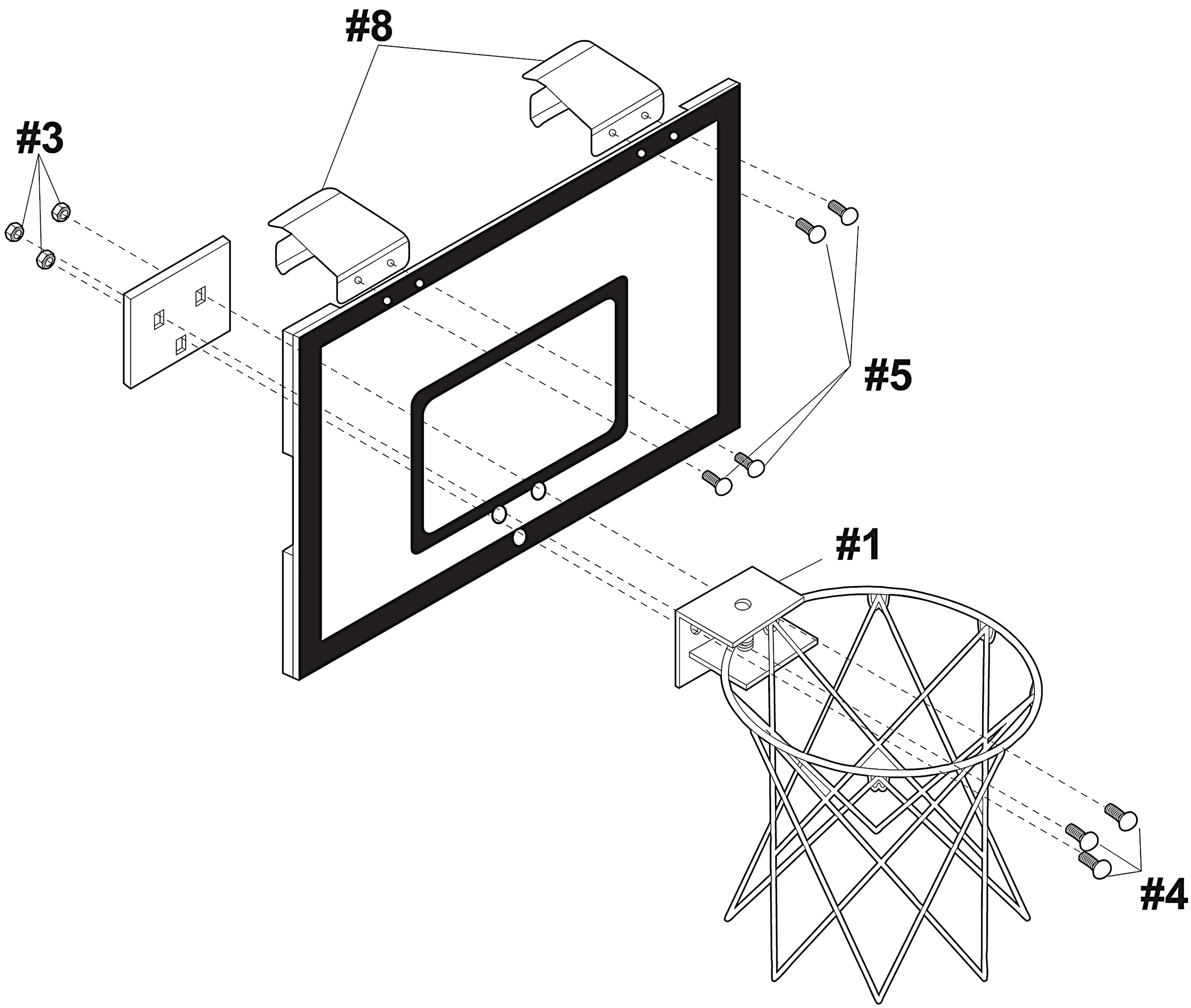
MANUAL INSTRUCTION